B.193 FP

ELESA Original design

Knurled grip knobs

PF +110° -20°

- **Material**
  Phenolic based (PF) Duroplast. Resistant to solvents, oils, greases and other chemical agents.
- **Colour**
  Black, glossy finish.
- **Assembly**
  Brass boss, tapped through hole.

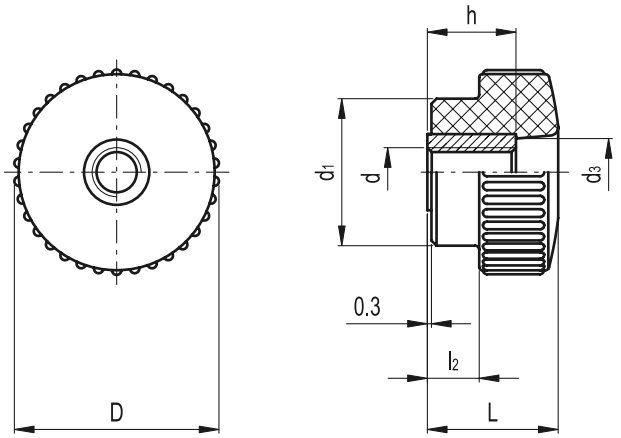

Standard Elements		Main dimensions					Mounting hole		⚖
Code	Description	D	L	d1	d3	l2	d 6H	h	g
2111	B.193/15 FP-M4	15	11	11	6	2	M4	10	4
2211	B.193/18 FP-M5	18	12	13	7	3	M5	10	5
2311	B.193/20 FP-M6	22	14	15	8	4	M6	11	8
2411	B.193/25 FP-M6	26	18	19	10	6	M6	15	16
2412	B.192/25 FP-M8	26	18	19	10	6	M8	15	17
2511	B.193/30 FP-M6	31	18	24	13	6	M6	15	22
2512	B.193/30 FP-M8	31	18	24	13	6	M8	15	21
2513	B.193/30 FP-M10	31	18	24	13	6	M10	15	24
2514	B.193/30 FP-M12	31	18	24	13	6	M12	15	20
2611	B.193/35 FP-M10	36	22.5	27	14	8	M10	15	31
2612	B.193/35 FP-M12	36	22.5	27	14	8	M12	15	30
2711	B.193/40 FP-M10	40	26	29	14	10	M10	15	40
2712	B.193/40 FP-M12	40	26	29	14	10	M12	15	38
2811	B.193/50 FP-M12	50	32	36	21	12	M12	21	72

B.193

ELESA Original design

Knurled grip knobs

PF +110° -20°

- **Material**
  Phenolic based (PF) Duroplast. Resistant to solvents, oils, greases and other chemical agents.
- **Colour**
  Black, glossy finish.
- **Assembly**
  Brass boss, tapped blind hole.

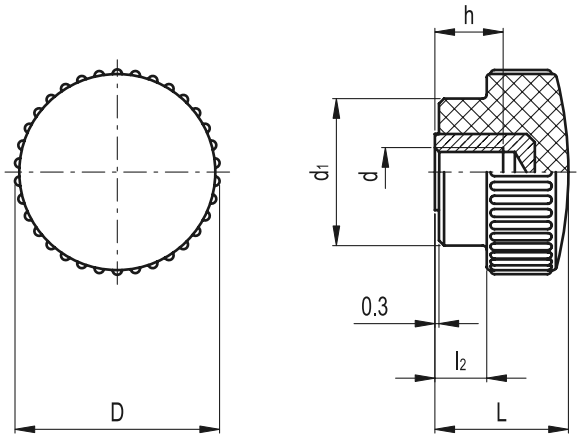

Standard Elements		Main dimensions				Mounting hole		⚖
Code	Description	D	L	d1	l2	d 6H	h	g
2101	B.193/15 B-M3	15	11	11	2	M3	6	4
2102	B.193/15 B-M4	15	11	11	2	M4	6	4
2103	B.193/15 B-M5	15	11	11	2	M5	5	4
2201	B.193/18 B-M5	18	12	13	3	M5	5	5
2301	B.193/20 B-M6	22	14	15	4	M6	6	8
2401	B.193/25 B-M6	26	18	19	6	M6	10	13
2501	B.193/30 B-M8	31	18	24	6	M8	10	20
2601	B.193/35 B-M8	36	23	27	8	M8	10	30
2701	B.193/40 B-M10	40	26	29	10	M10	13	38
2801	B.193/50 B-M10	50	32	36	12	M10	17	73
2802	B.193/50 B-M12	50	32	36	12	M12	20	80

elesa+GANTER
ELESA and GANTER models all rights reserved in accordance with the law. Always mention the source when reproducing our drawings.